ENCLO

HIDE IT WITH STYLE

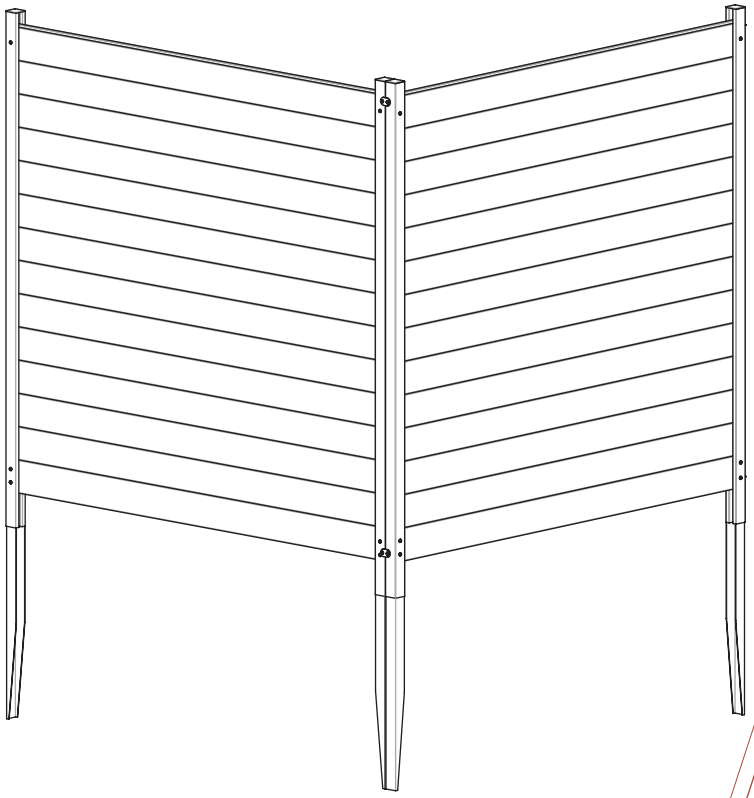

Lincoln
Screen Kit

90 min
Approximate assembly time for 2 screens

Scan the QR code
for an assembly video

ASSEMBLY INSTRUCTIONS

EC18001 (CEDAR COLOR)
EC18002 (CHARCOAL COLOR)

www.**encloscreens**.com

VER. **120122**

GENERAL INFORMATION

IMPORTANT

- Check the inside of the larger pieces in your box for other materials packed inside.
- When assembling components, place on a non-abrasive surface (i.e. shipping box) to avoid scratching.
- We recommend an area approximately 5'x 8' for unobstructed assembling.
- You should not need to use excessive force when assembling components.

MISSING OR DAMAGED PARTS?

VISIT OUR WEBSITE FIRST, SO WE CAN HELP YOU RIGHT AWAY!

Although great care has been taken to ensure proper packaging and handling of this product, occasionally problems occur. If you discover any missing, damaged or defective parts, please visit our website to order replacement parts. If you experience any further trouble with your product, please contact our customer service department.

parts.nychbrands.com

support@encloscreens.com

704-892-5222 / 877-234-6196

Customer service agents are available to take calls weekdays from **9am-5pm EST**. *If you call outside of business hours, please leave a voicemail.*

To help you quickly and accurately, please have reference item number **EC18001** (CEDAR COLOR) / **EC18002** (CHARCOAL COLOR) and the specific part name which can be found on the next page. It is helpful if you can provide the batch lot which is a stamped number on the end of the box.

NEED ASSEMBLY HELP?

If you are having problems with the assembly or installation of this product, we are happy to assist you with the process, **so please give us a call at 704-892-5222 / 877-234-6196.**

NEED TO RETURN?

If for some reason you need to return this product, please allow us to help resolve your issues first. If you still decide to return the product, **you will need to initiate the return from the company you originally purchased from.**

Detailed Product Dimensions & Specifications

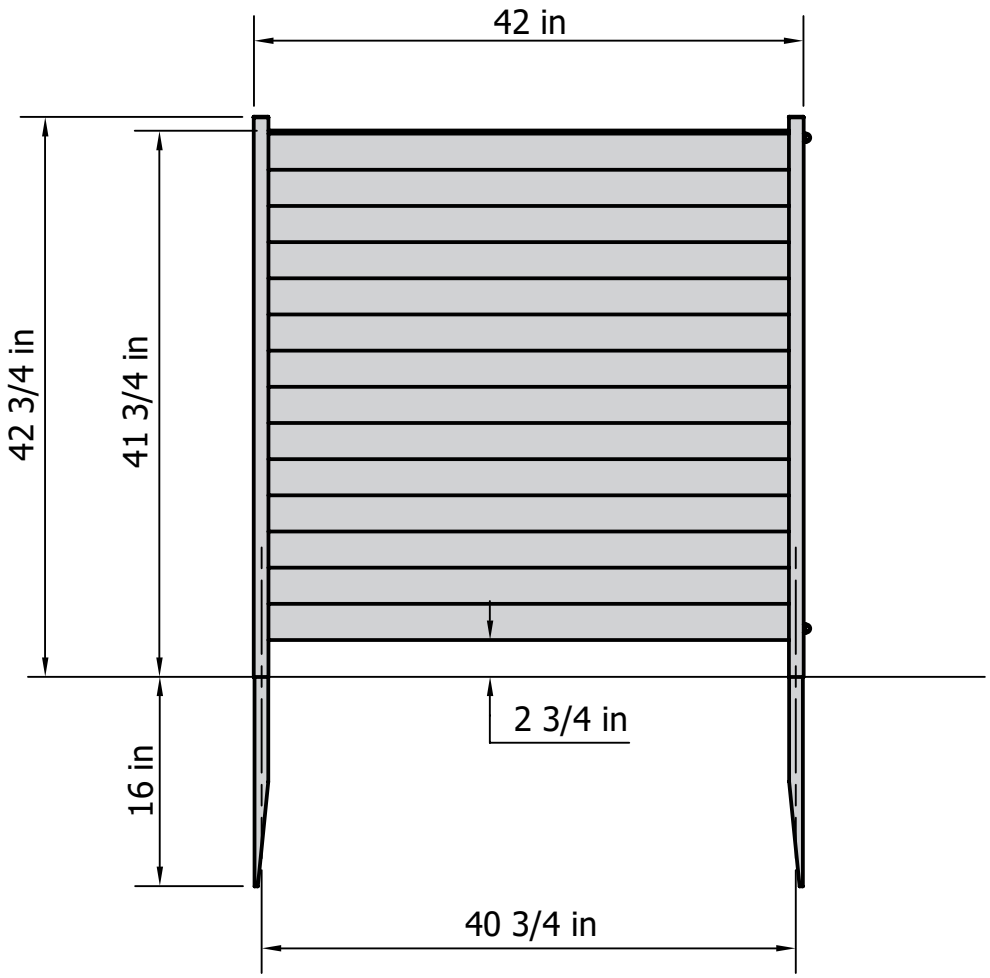

STEP 1: LAY OUT MATERIALS

A

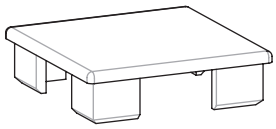

Post Cap (4)

B

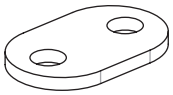

Joiner Clip (2)

C

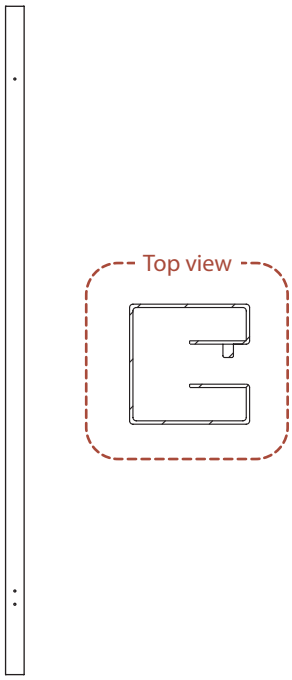

Left Post (2)
1 ⅛" x 1 ⅛" x 42 ¾"

D

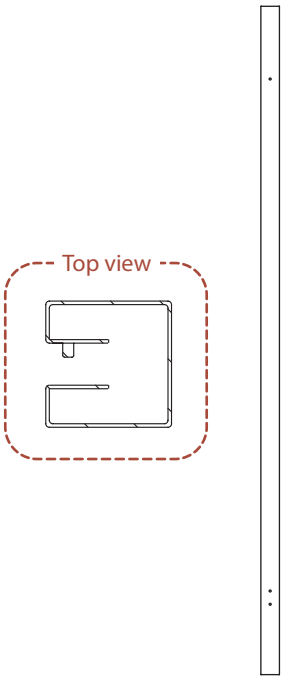

Right Post (2)
1 ⅛" x 1 ⅛" x 42 ¾"

E

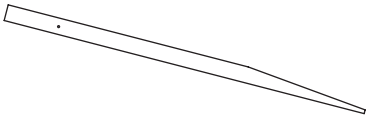

Post Anchor (4)
1" x 1" x 24"

F

Post Board (28)
⅜" x 3" x 41 ½"

G

1" Stainless Steel Screw (16)

H

Spacer (2)
⅝" x ⅝" x 2 ¾"

STEP 2: INSERT PRIVACY BOARD

STEP 2.1

- Position (2) Left Posts **(C)** and Right Posts **(D)** so the pre-drilled holes for both posts face forward and the open channels face towards each other as shown.

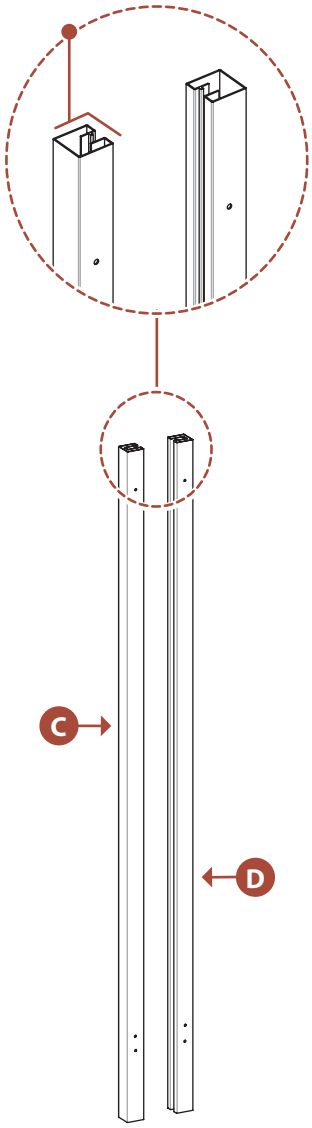

STEP 2.2

1. Insert a Privacy Board **(F)** into the grooves of the left and right post.
2. Insert (1) Spacer **(H)** into the bottom of each post until it is flush with the post bottom. Slide the board until it rests on the spacers.

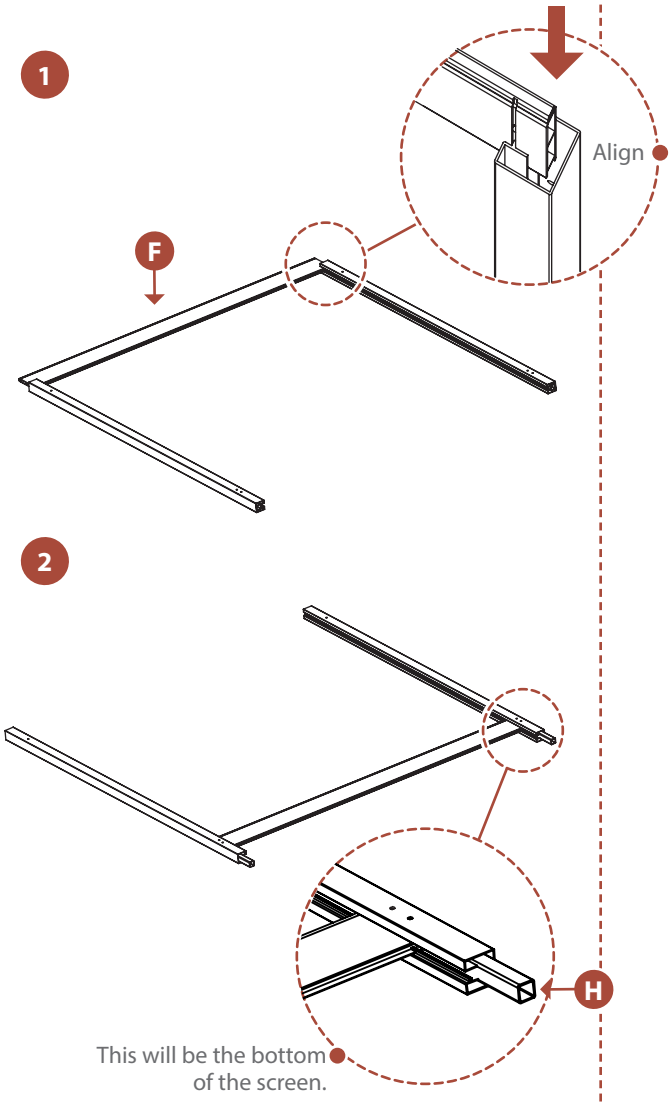

STEP 3: ASSEMBLE THE FIRST SCREEN

STEP 3.1

1. Insert 13 additional privacy boards into the post channels.
2. Drive (2) 1" Stainless Steel Screws **(G)** into the pre-drilled holes in the posts to secure the privacy boards.

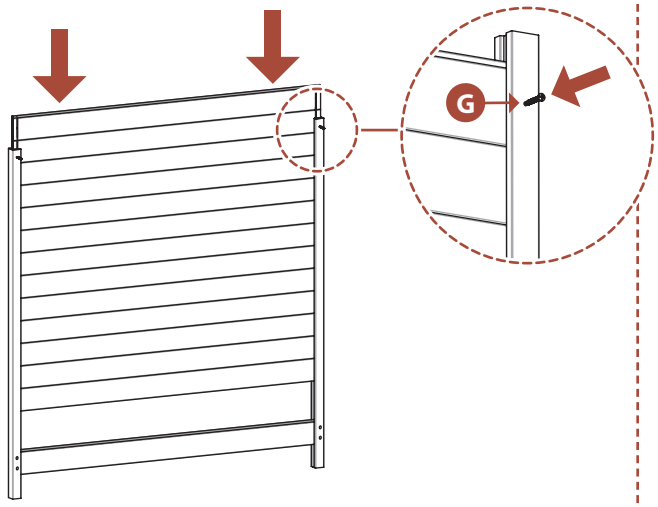

STEP 3.2

1. Flip the screen so that the bottom of the posts are facing up. Remove the (2) spacers, then insert (2) Post Anchors **(E)**, into the posts until the pre-drilled hole in the anchors and posts align as shown below.
2. Drive (4) 1" stainless steel screws into the pre-drilled holes in the posts to secure the privacy boards and post anchors.

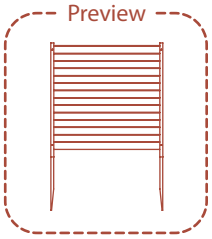

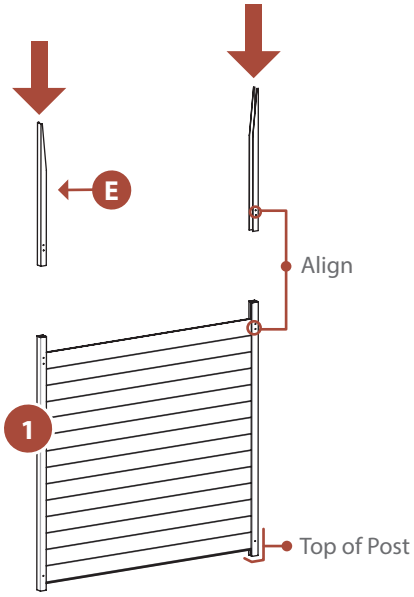

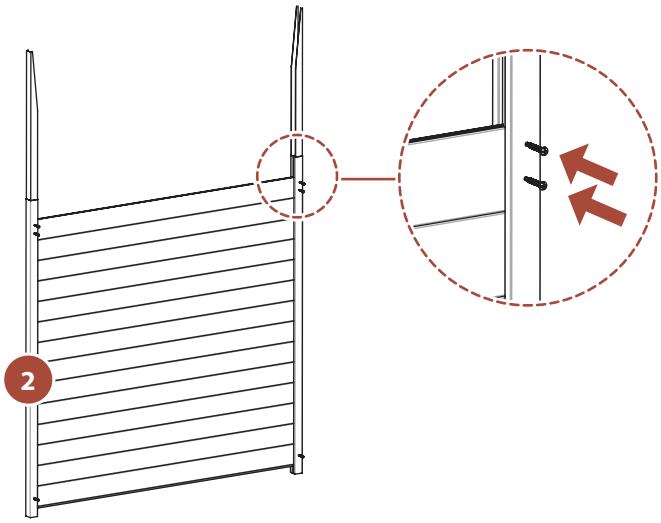

STEP 4: **ASSEMBLE** THE SECOND SCREEN

STEP 4.1

- Repeat Steps 2-3 in order to assemble the second screen.

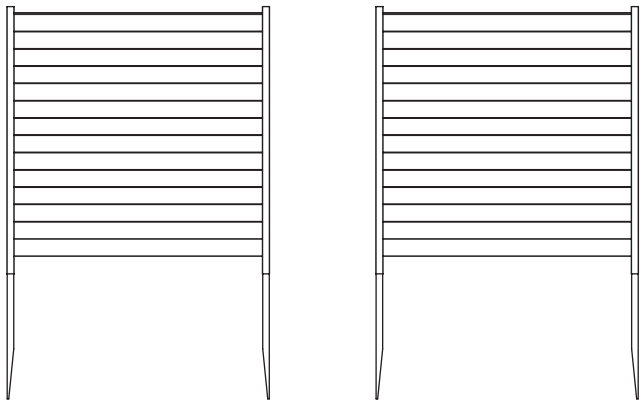

STEP 5: **INSTALLING** THE SCREEN IN THE GROUND

STEP 5.1

1. Move the screen to its final location and identify where the posts are located. Attempt to push the unit into the ground as illustrated.
2. If your ground is too hard, loosen the top 6" or 7" of the ground with a claw hammer as illustrated.
3. Add water to loosened soil.
4. Use a block of wood to protect the top of the post and gently hammer the post into the ground.

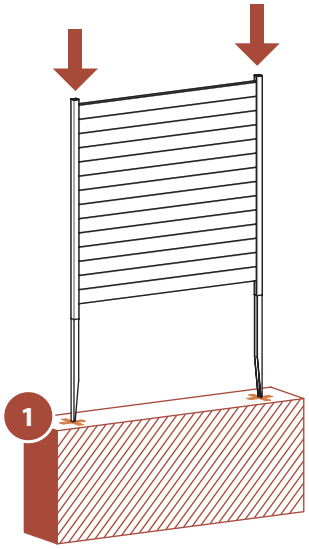

Push down on the top of the posts with both hands

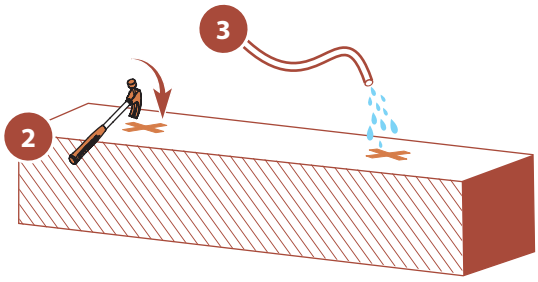

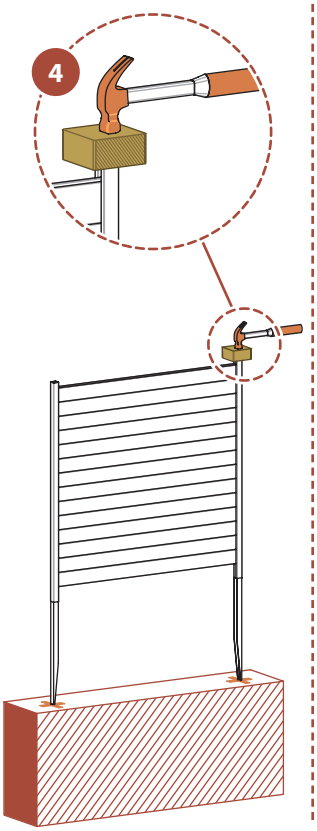

STEP 5.2

Optional in hard ground: If your ground is too hard, or you have more than 3 or 4 panels to install, please consider these options:

1. Use a 1¾" diameter auger bit (commonly used for planting tulips) as illustrated ($15-$20 on Amazon.com).
2. Drill a hole about 12" to 16" deep at the desired location, and fill the holes with water as illustrated.
3. Push the panel posts into the holes.

1

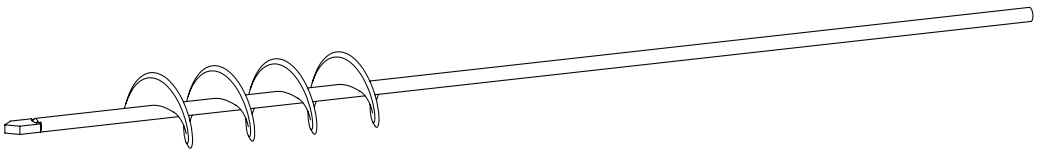

2

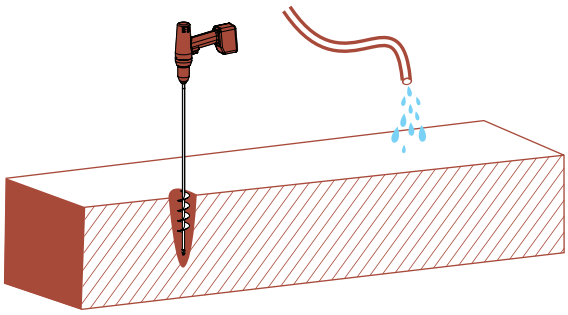

3

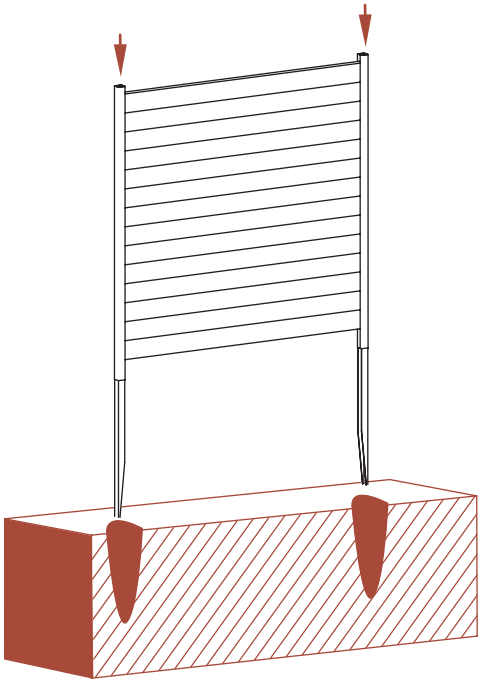

STEP 5.3

- If your ground is really hard, you may need to dig a hole 8" in diameter and 14" deep to accommodate one post from each panel into the same hole.

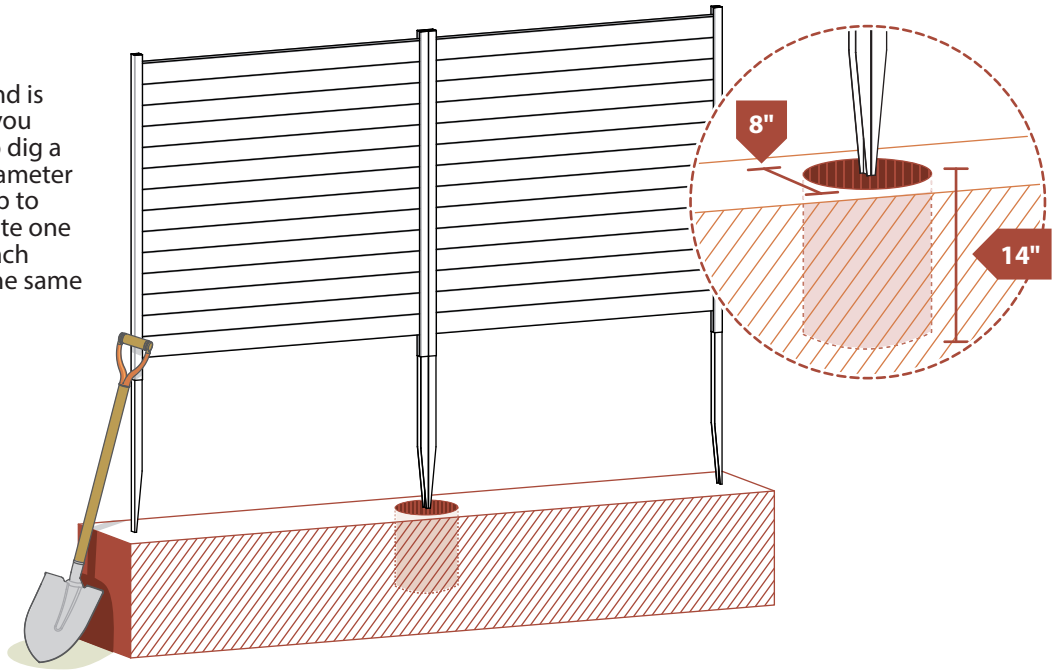

STEP 5.4

- Level the screen as necessary, backfill excavated dirt, and tamp if needed.

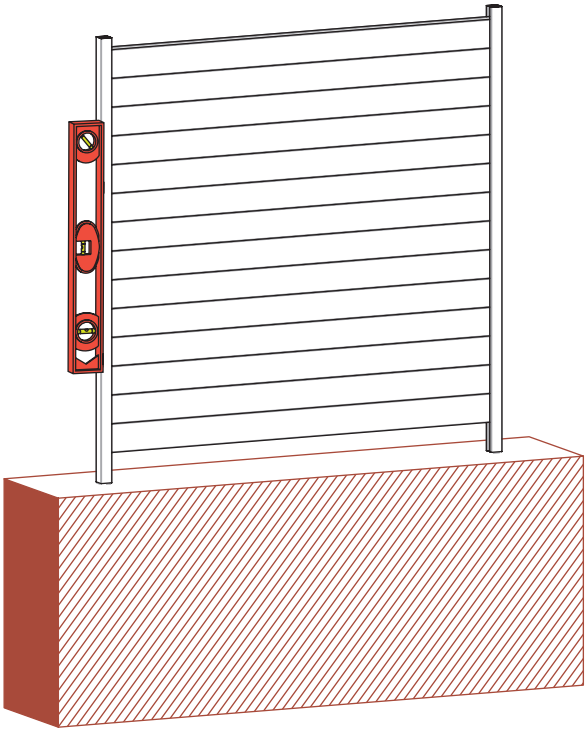

STEP 6: CONNECT THE SCREENS

STEP 6.1

1. **Straight Line Application:** Connect the screens as shown below using Joiner Clips **(B)** and 1" Stainless Steel Screws.
2. **Corner Application:** Connect the screens as shown below using Joiner Clips **(B)** and 1" Stainless Steel Screws.

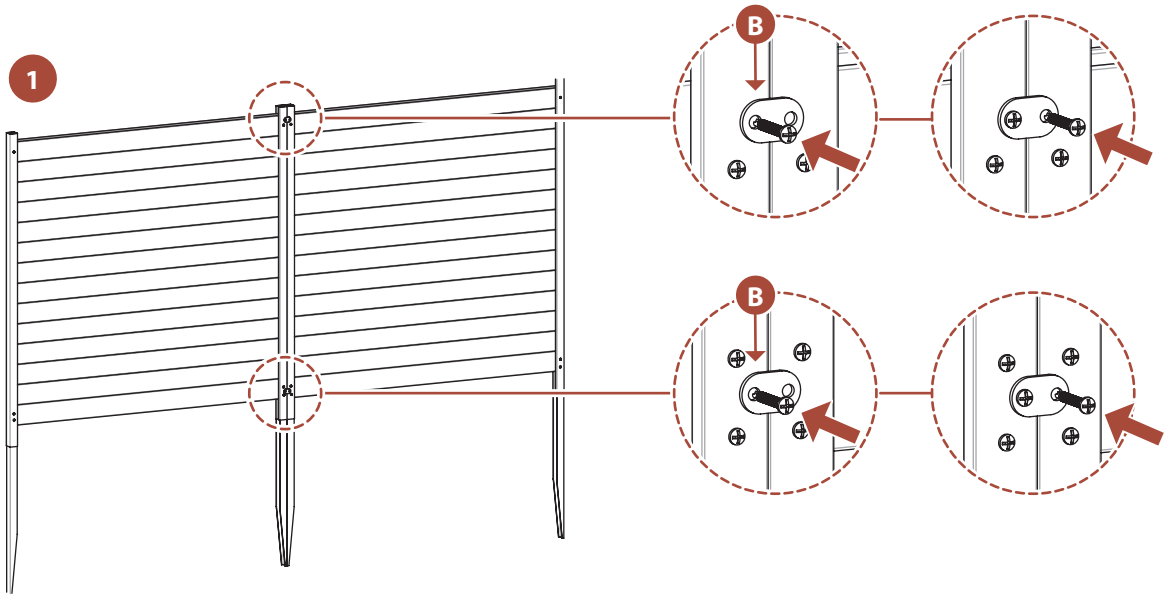

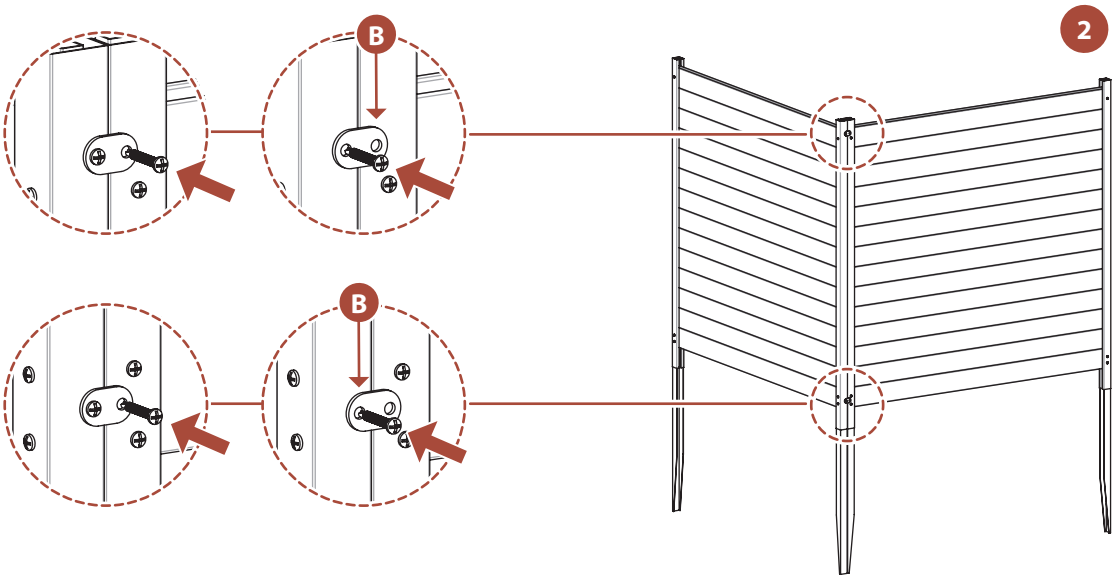

STEP 7: **INSTALL** POST CAPS

STEP 7.1

Install Post Caps **(A)** into the top of the posts.

NOTE: *If the fit is tight, use a hammer and a piece of cardboard to protect the post cap to tap the cap into place.*

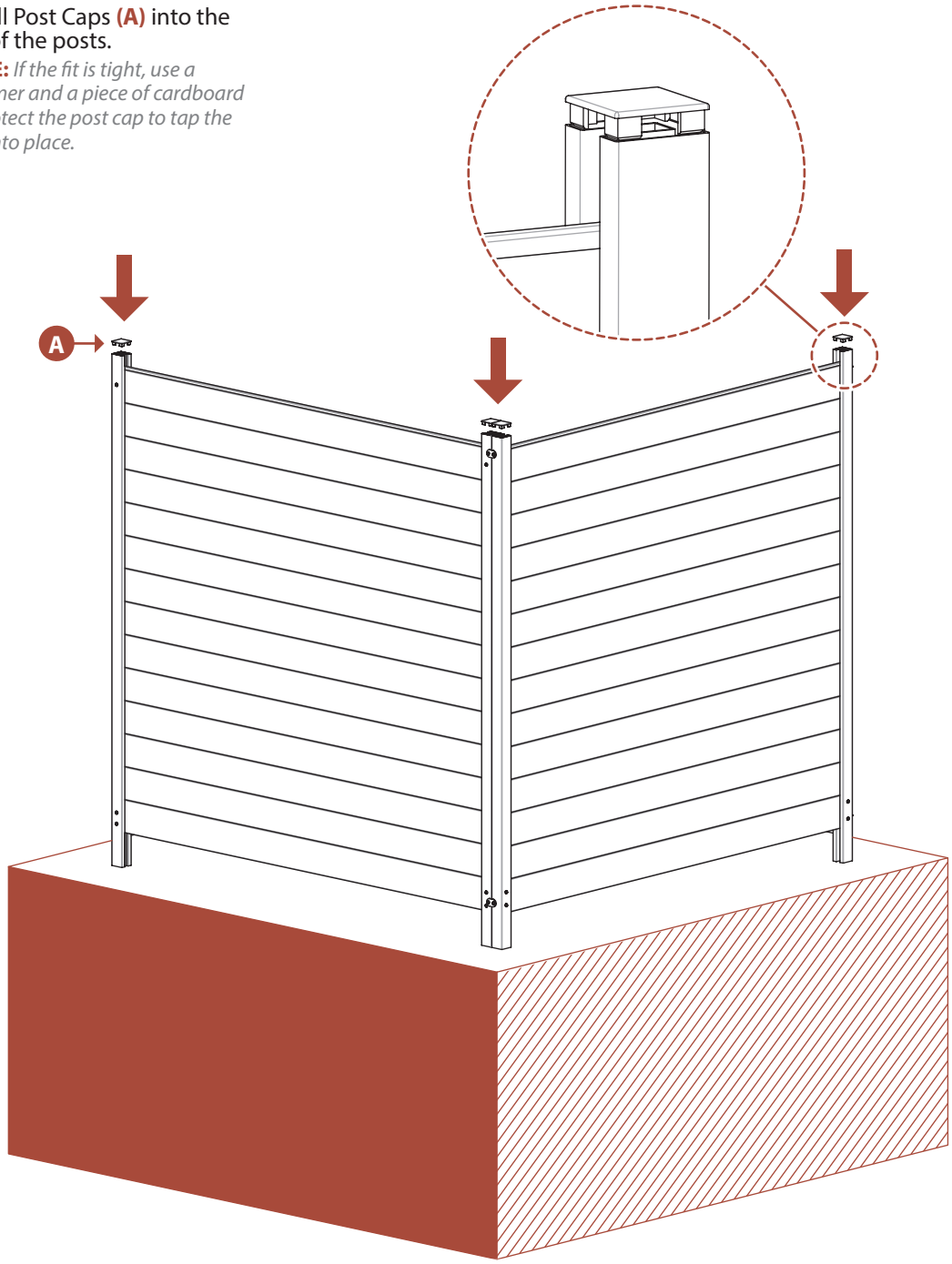

ENCLO

HIDE IT WITH STYLE

www.encloscreens.com

support@encloscreens.com

704-892-5222
877-234-6196

6935 Reames Rd. Ste. K.
Charlotte, NC 28216

ASSEMBLY INSTRUCTIONS

EC18001 (CEDAR COLOR)
EC18002 (CHARCOAL COLOR)

VER. **120122**